LT8210-1 Supply Design Summary Report

Vin : 12V (min.), 20V (nom.), 33V (max.)

Output Rails : Vout1 = 12V / 20A (max.)

Project Name : LV LT8210-1 First Iter

Project Date : Qazi Arsalan Ahmed

Designer : 11/12/2025

Generated by ***LTpowerCAD***

Copyright © 2021 Analog Devices Inc.

Printed : 03/31/2026

LT8210-1 Solution - Simplified Schematic

Vin : 12V (min.), 20V (nom.), 33V (max.)

Output Rails : Vout1 = 12V / 20A (max.)

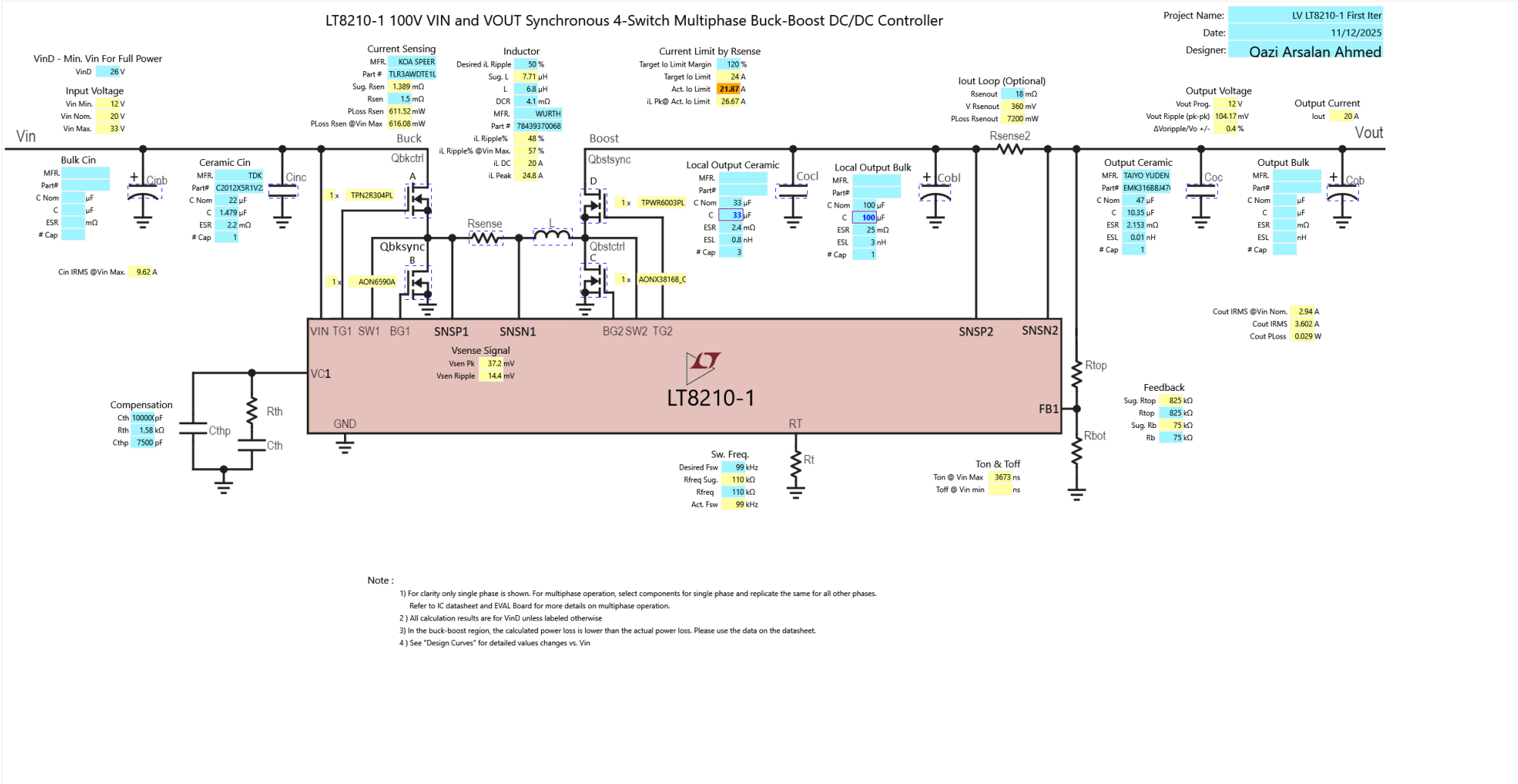

Note :

1) For clarity only single phase is shown. For multiphase operation, select components for single phase and replicate the same for all other phases.
Refer to IC datasheet and EVAL Board for more details on multiphase operation.

2) All calculation results are for VinD unless labeled otherwise

3) In the buck-boost region, the calculated power loss is lower than the actual power loss. Please use the data on the datasheet.

4) See "Design Curves" for detailed values changes vs. Vin

Generated by ***LTpowerCAD***

Copyright © 2021 Analog Devices Inc.

Printed : 03/31/2026

LT8210-1 Solution - Efficiency & Loss Estimations

Rail # 1 : Vin = 20V, Vout1 = 12V

** Estimations For CCM Mode Only. Inductor AC Losses Entered by User*

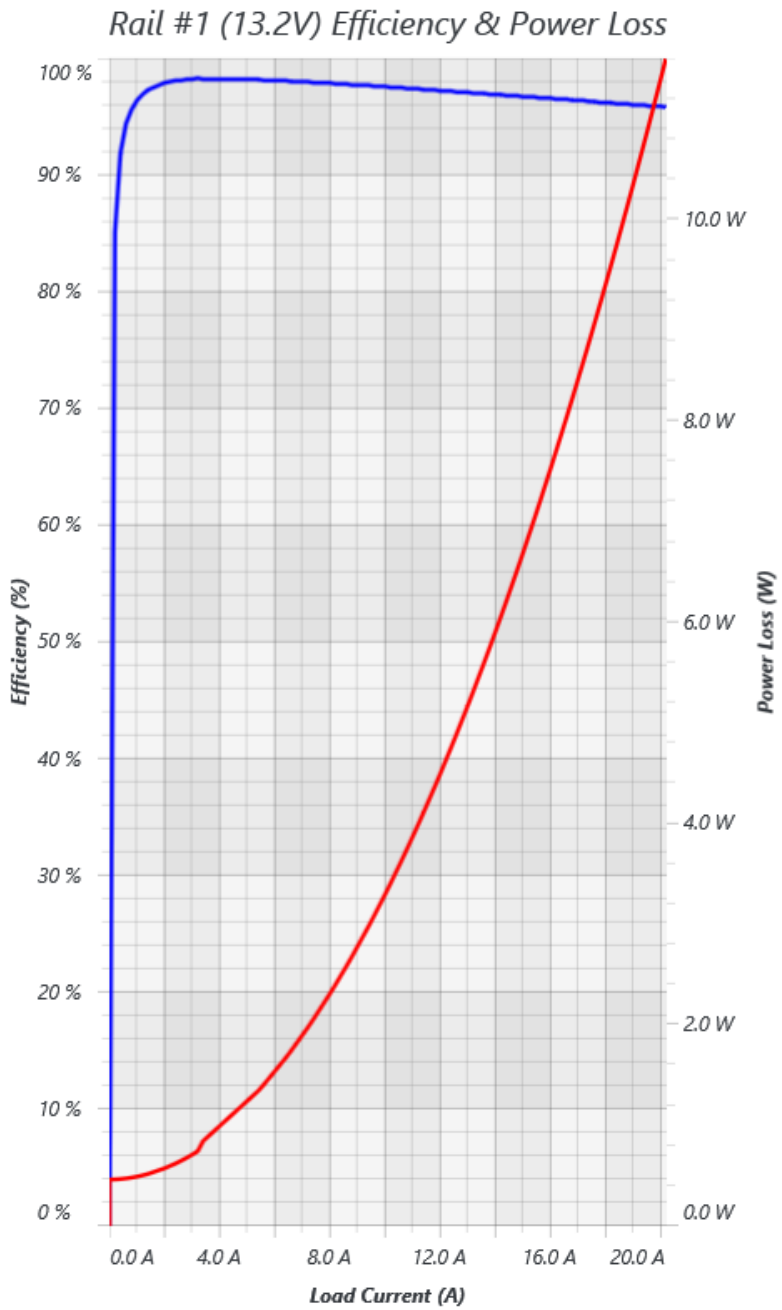

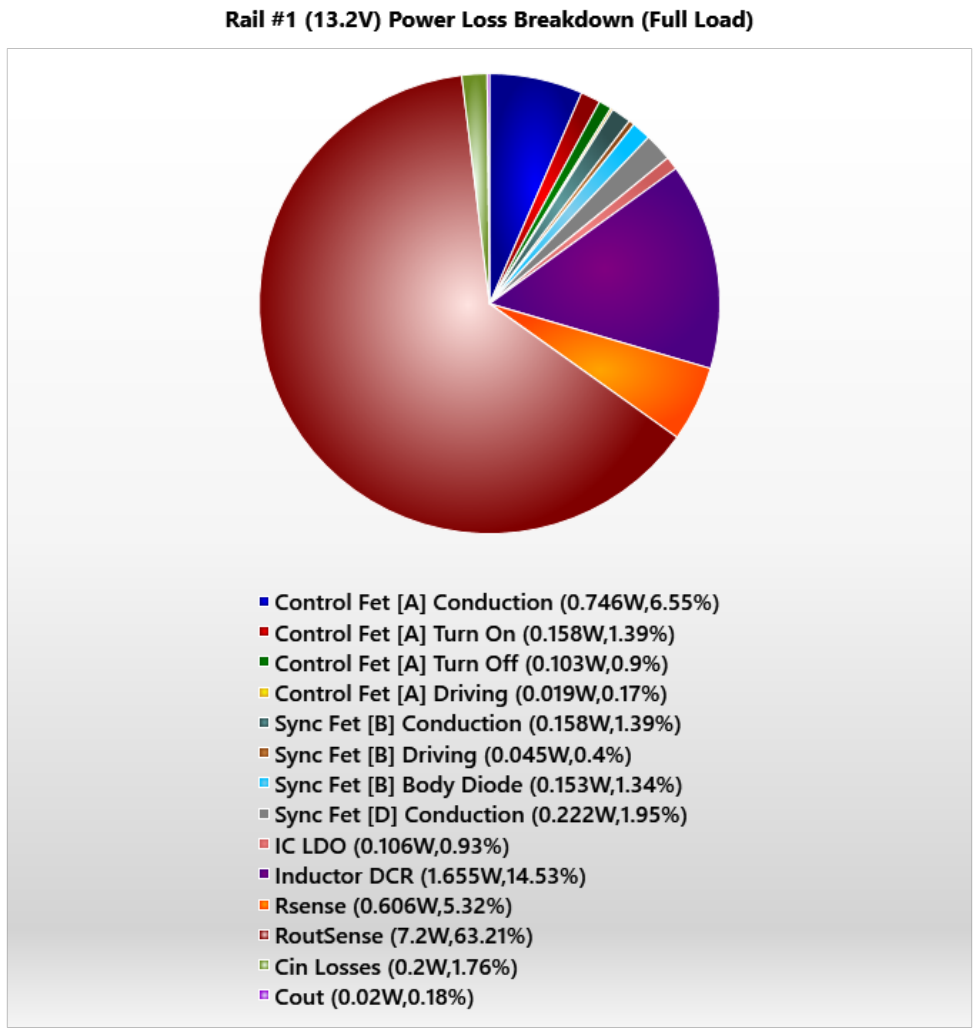

Copyright © 2021 Analog Devices Inc.

LT8210-1 Solution - Loop Gain & Load Transient Estimations

Rail # 1 : Vin = 20V, Vout1 = 12V, Iout1 = 20A

** Estimations For CCM Mode Only. Estimations Based On Small Signal Avg. Model*

Rail #1 (13.2V) Loop Gain

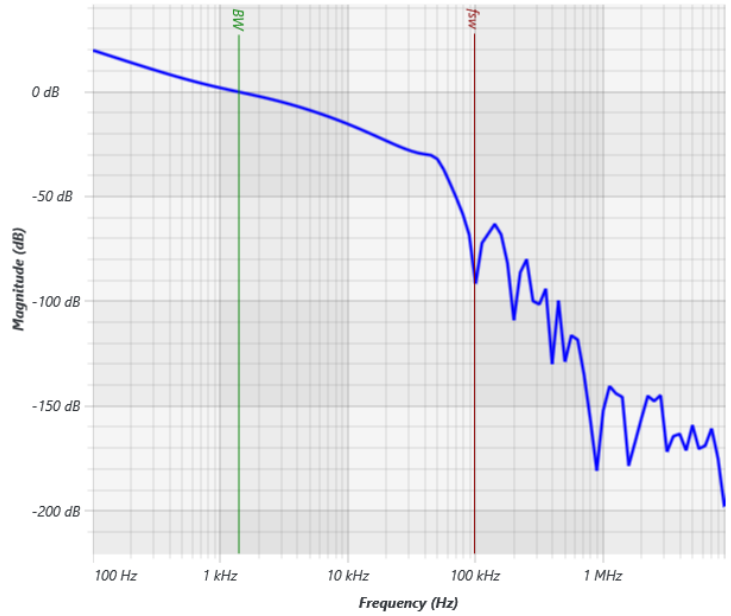

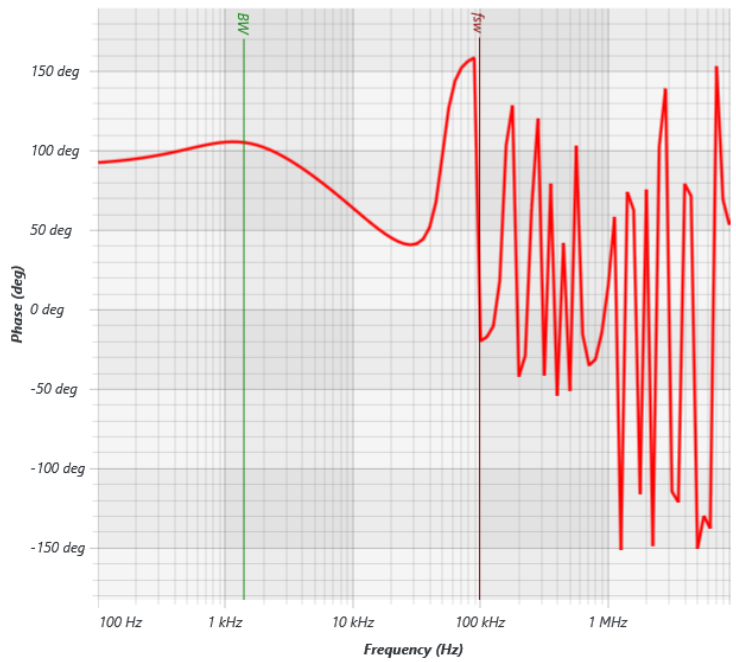

Generated by **LTpowerCAD**

Copyright © 2021 Analog Devices Inc.

Printed : 03/31/2026

LT8210-1 Solution - Summary

LT8210-1 Supply Design Summary

Project Info: *LV LT8210-1 First Iter, Qazi Arsalan Ahmed, 11/12/2025*

Design Specifications

Steady State :

Rail #	Vin Min.	Vin Nom.	Vin Max.	Fsw	Vo	ΔVo	ΔVo%	Io Max	ΔiLp-p	ΔiL%	iLpk	Duty Max	Ton min.	Toff min.

Efficiency and Loop :

Rail #	Vo	Iomax	Eff.@Iomax	PLoss@Iomax	Loop BW	Loop PM

Recommendations and Warnings :

Message

Power Components

Power Components Bill Of Materials : Export BOM

Ref. Des.	Value	Quantity	Description	Mfr. Name	Mfr. Part #	Pkg. (Imperial)	L(mm)	W(mm)	H(mm)	User Note
U1		1	IC	LINEAR TECH	LT8210-1		6	6	0.75	
Lo1	6.8µH	1	IND	WURTH	78439370068		16.4	15.4	10	
Cinc1	22µF	1	CAP	TDK	C2012X5R1V226M125AC	0805	2	1.25	1.25	
Coc1	47µF	1	CAP	TAIYO YUDEN	EMK316BBJ476ML-T	1206	3.2	1.6	1.9	
Cobl1	100µF	1	CAP				0	0	0	
Cocl1 Cocl2 Cocl3	33µF	3	CAP				0	0	0	
Rsense1	1.5mΩ	1	RES	KOA SPEER	TLR3AWDTE1L50F75		6.35	3.18	0.6	
RoutSense1	18mΩ	1	RES				0	0	0	
MctrlA1	40V	1	FET	TOSHIBA	TPN2R304PL		3.6	3.6	0.9	
MsyncB1	40V	1	FET	AOS	AON6590A		6.05	5.2	0.95	
MctrlC2	25V	1	FET	AOS	AONX38168_Q1		6.1	5.1	0.85	
MsyncD2	30V	1	FET	TOSHIBA	TPWR6003PL		5.2	6.3	0.83	

Power Components Footprint :

# Components	14	
Max. Height	10	mm
Component Clearance (d)	1.5	mm
* Power Components Area (Excludes ICs)	542.5	mm^2
	0.841	in^2
* Power Components Area (Includes ICs)	598.7	mm^2
	0.928	in^2

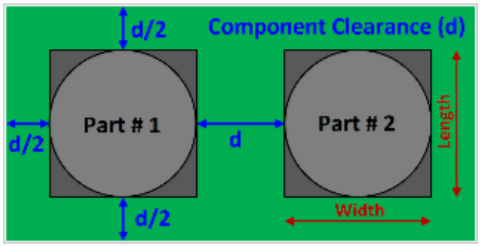

**** Notes :***

1. *The calculated power component area is only the simple sum of component footprint areas with given clearance, assuming all power components are on the same side of PCB. It is NOT the final PCB size with layout design.*
2. *Component count should change with the number of paralleled phases.*

Generated by ***LTpowerCAD***

Copyright © 2021 Analog Devices Inc.